International Association
Bridge Earthquake Engineering

The Third International Bridge Seismic Workshop, 3rd IBSW

Seattle, Washington, USA - October 1st to 4th, 2019

TESTING OF A LOW DAMAGE MULTI-JOINT ROCKING PIER USING THE MULTI-PERFORMANCE DESIGN CONCEPT

R. Liu[(1)], A. Palermo[(2)]

[(1)] *Post-doctoral fellow, University of Canterbury, royce.liu@canterbury.ac.nz*
[(2)] *Professor, University of Canterbury, alessandro.palermo@canterbury.ac.nz*

Abstract

Under seismic loads, bridges are commonly designed to meet performance targets at the Ultimate Limit State, ULS (also called the Damage Control Limit State, DCLS) with no requirements to explicitly check for performance beyond that in a Maximum Credible Earthquake, MCE scenario (also called the Collapse Avoidance Limit State, CALS). This means that for novel structural systems used for the substructure of bridges such as bridge piers with rocking foundations, the system may be low damage at ULS/DCLS but may experience plastic hinging at MCE/CALS. Such scenarios have been observed in past physical tests on bridge piers with rocking foundations. To overcome this issue, the combination of the concepts of "multi-performance design" and "hierarchical activation" is proposed whereby bridge piers are designed and checked at both the ULS/DCLS and MCE/CALS limit state and the mechanisms for resisting seismic loads at each of those limit states are different in order to minimize damage and improve structural robustness. Experimental testing of a 2/3 scale bridge pier combining a post-tensioned rocking column with a rocking pile cap is presented as a proof of concept of the proposed paradigm. This contribution will describe the design philosophy of the specimen, testing undertaken, results obtained, and comparison of results against modelling undertaken to predict the specimen behavior.

Keywords: bridge piers, multi-performance design, rocking, unbonded post-tensioning, structural robustness

1. Introduction

Under seismic loading, bridge piers are commonly designed to meet performance targets at the Ultimate Limit State, ULS (referred to as the Damage Control Limit State, DCLS [1] in New Zealand) with no requirements (unless at the direction of the client) to explicitly check for the performance of the pier under a Maximum Credible Earthquake scenario (also called the Collapse Avoidance Limit State, CALS). For cast in place reinforced concrete piers this is understandable from the point of view that such structural systems are not low damage and hence only need to be designed to prevent collapse in order to meet life safety requirements. However, for novel structural systems claiming to be a low damage alternative for bridge piers, under current requirements, such systems may indeed perform as a low damage system at ULS/DCLS but may still experience plastic hinging at MCE/CALS. Such an issue is apparent for single column bridge piers with rocking foundations (Fig. 1), where, past experiments have shown that although curvature ductility demands are reduced by foundation rocking unless specifically designed for (as is the case for the study by [2]) plastic hinging will still occur [3]–[6].

Fig. 1 - Plastic hinging occurring in a column with rocking shallow foundation [5].

1.1 Foundation rocking

Foundation rocking is a form of seismic isolation. Seismic loads are reduced by period elongation and soil-structure interaction effects. Foundation rocking can be implemented in two different ways: an uplifting shallow foundation (Fig. 2a and 2b) or an uplifting pile cap on unattached piles (Fig. 2c). With respect to rocking shallow foundations, the system can be designed so that either the soil remains “elastic” or the soil is allowed to “yield”. The bulk of experimental research undertaken on rocking shallow foundations has been focused on developing an understanding of the amount of damping obtained from impact and soil deformation and its relationship to residual settlement and drift [3], [4], [7]. The largest scale shaking table experiment to date conducted on bridge piers with rocking foundations was undertaken by [8] on two 1/3 scale specimens which were placed within a laminar soil box.

A rocking pile cap foundation (Fig. 2c) can be used in instances where the near surface ground conditions are not suitable for a rocking shallow foundation. Recently, [9] undertook quasi-static cyclic testing of a ¼ scale bridge pier with rocking pile cap. The column of the pier was designed to remain fully elastic. Despite this, their testing showed the effectiveness of this system in reducing moment demands in the piles and hence demonstrated the ability of a rocking pile cap to reduce damage to piles when compared to a benchmark specimen using conventionally fixed piles.

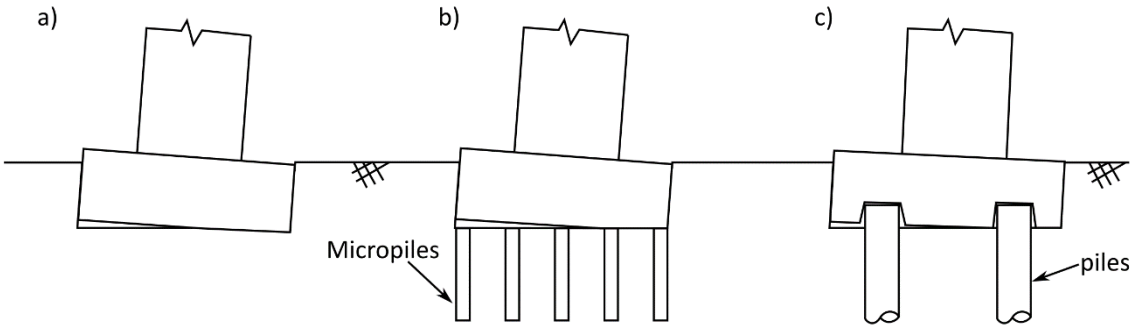

Fig. 2 - a) and b) examples of rocking shallow foundations, c) example of a rocking pile cap foundation.

1.2 Post-tensioned rocking with dissipaters

The post-tensioned rocking system (Fig. 3), also known as PRESSS [10], [11] or Dissipative Controlled Rocking (DCR) is an alternative design strategy to conventional reinforced concrete plastic hinging with the aim of significantly reducing residual drifts, structural damage, and downtime. It is the combination of rocking, with unbonded post-tensioning, and dissipative devices (Fig. 3). The dissipative devices used can be as simple as partially debonded rebar or externally mounted miniature Buckling Restrained Brace (BRB) like devices such as the buckling restrained fuse type dissipater [12]–[14] or the grooved dissipater [15]. This system can be used to replace conventional reinforced concrete columns and walls for bridge piers. Limitations of this system are the elongation capacity of the post-tensioning prior to yielding and the low cycle fatigue capacity of the dissipaters.

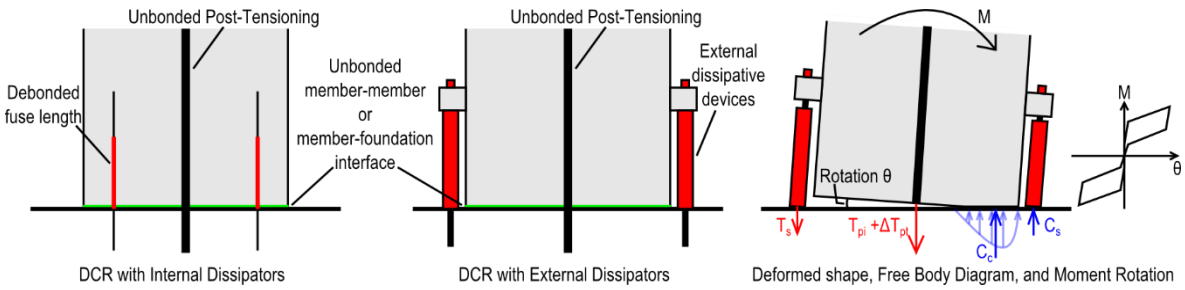

Fig. 3 - Examples of DCR showing use of internal and external dissipaters in addition to the mechanics of the rocking joint [16]

1.3 Multi-performance design and hierarchical activation

The concept of multi-performance design is the explicit consideration of performance at multiple limit states, specifically, at the design level (DCLS) and beyond (CALS). Such a frame work would be well suited for novel structural systems for bridge piers as it would force designers to recognize the limitations in performance offered by that system, especially with respect to the amount of damage reduction offered and the change in the difficulty and nature of repair once the structure is pushed beyond DCLS.

The second concept proposed in this paper is hierarchical activation. This is the incorporation of multiple lateral load resisting mechanisms (e.g. multiple rocking interfaces in a cantilever column) and or dissipative devices (e.g. multiple sets of dissipative devices) in a structure and the design of the system such that the mechanism or devices are activated in an order dependent on load intensity. For example, consider a cantilever DCR column with two sets of dissipative devices across the rocking interface [17]. This system would be designed such that up to DCLS only one set of dissipative devices is active and only when the structure exceeds its design displacement is the second set activated in addition to the first. The activation of the second set of

devices would increase the moment capacity of the base of the structure limiting the peak lateral displacements and prevent yielding of the post-tensioning.

Combining the concepts of multi-performance design and hierarchical activation allows complete control of the performance of a structure at multiple limit states and the ability to avoid undesirable damage. Depending on the combination of multiple mechanisms or devices used, an additional benefit is the improvement of seismic structural robustness [18], [19]. Here, structural robustness is defined as structural design details which increase the margin of safety against local and or global failure of the structure under a given load case. An example of a structure combining the concepts of multi-performance design and hierarchical activation is the combination of a DCR column with a rocking foundation (Fig. 4), where, the DCR column is relied upon up to and including DCLS (Fig. 4a-4b), whilst, the rocking foundation is activated after reaching that limit state (Fig. 4c). In this way, the peak elongation of the post-tensioning can be limited at CALS avoiding yielding and loss of column self-centering ability whilst also making use of the period elongation properties of a rocking foundation. This paper presents the testing and results of a physical model of a scale DCR cantilever column combined with a rocking pile cap foundation.

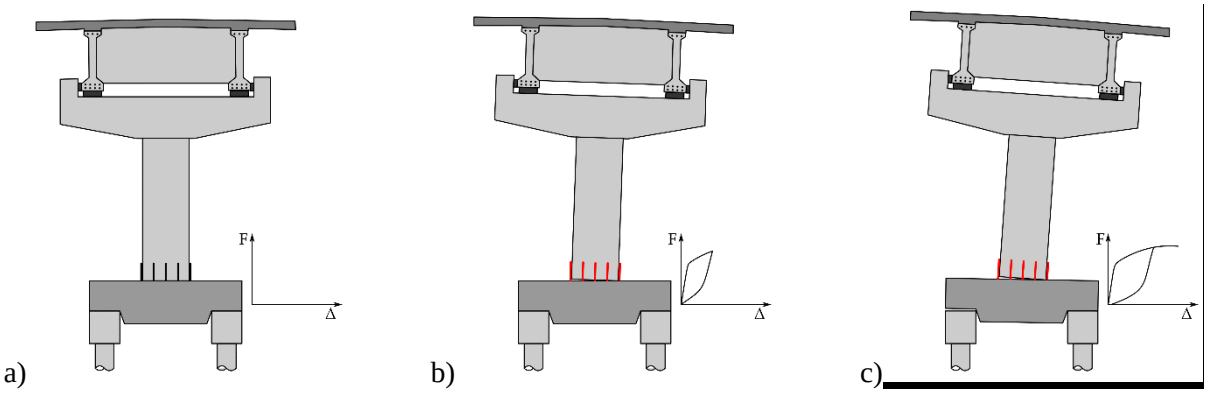

Fig. 4 - Combination of DCR and pile cap rocking illustrating multi-performance design and hierarchical activation. b) Structural response at DCLS and c) response at CALS.

2. Experimental Investigation

The specimen (Fig. 5) was a fully precast DCR cantilever column with rocking pile cap foundation. It was 2/3 scale of the prototype structure. The column had a cantilever length of 4m, a clear length of 3.4m, a diameter of 1m, and was octagonal in section. The base of the column had a 0.9m tall custom octagonal hollow section (Fig. 6a and 6b) that was composite with the concrete in the column. The hollow section was used to prevent concrete crushing at the edges of the rocking interface and also provided attachment points for dissipative devices (Fig. 6a and 6b). On top of the column was a 1.2m deep loading beam used to facilitate the application of forces to the specimen. The loading beam did not correspond to the actual orientation of the bent cap in the prototype structure.

The pile cap (Fig. 6c) was 0.9m thick, 3.83m deep in the direction of rocking, and 2.6m wide. It was supported on two ground beams that each provided a seat width of 0.63m. Between the pile cap and ground beam a neoprene strip was used to ensure even bearing. In this support arrangement, the heads of the piles were imagined to terminate within the ground beams. This unconventional support arrangement for the pile cap was chosen for two reasons: to eliminate issues surrounding construction tolerances for a socketed connection between the pile and pile cap; and to simplify levelling of the pile cap on its supports. The pile cap had concrete outstands on the bottom side to act as shear keys in the direction of loading (Fig. 6c). The pile cap was restrained from transverse movement by shear keys provided by the ground beams.

In terms of the DCR component of the specimen, a 50mm diameter Macalloy bar of 5900mm unbonded length at the centerline of the column anchored the top of the loading beam to the underside of the pile cap.

Eight tension-compression yielding steel dissipaters connected the column to the pile cap and crossed the rocking interface at the base of the column (Fig. 6b). The dissipaters were 36mm in diameter and made of grade 300 mild steel. These dissipative devices were grooved type buckling restrained fuse dissipaters, where, the fuse length was formed by cutting grooves into a steel rod and surrounding the rod with an anti-buckling tube. The dissipaters used had a fuse that was cruciform shaped in section, a fuse area of 400mm^2, and a fuse length of 290mm.

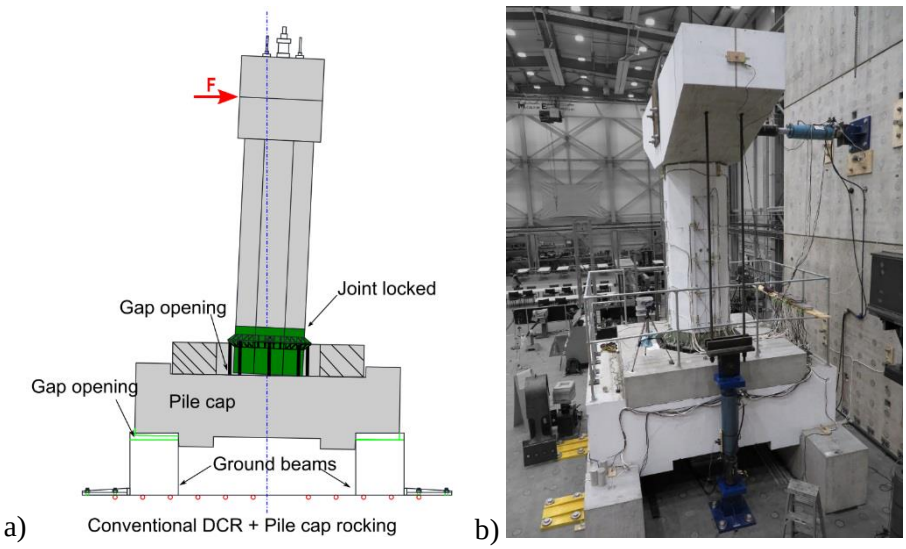

Fig. 5 - a) Schematic of specimen in the deformed state showing locations of rocking joints. b) Side view of specimen

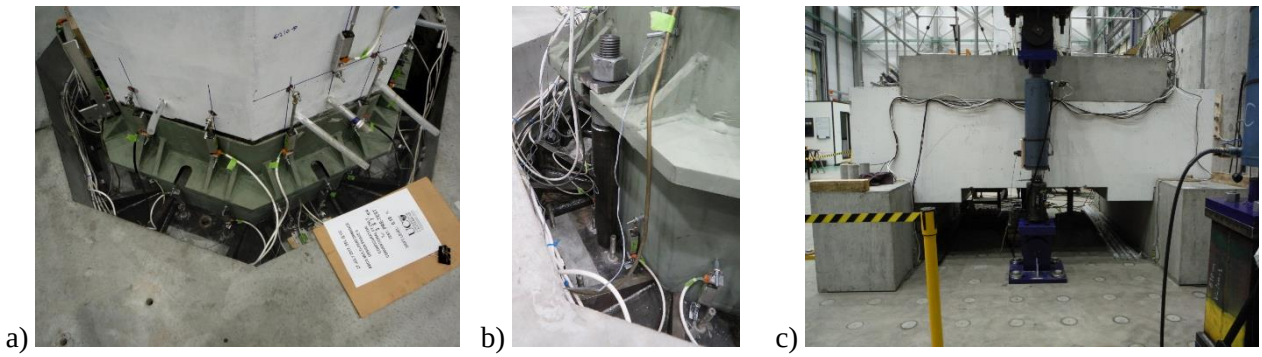

Fig. 6 - Details of the specimen. a) and b) Details of the base of the column showing the dissipater attachment points and an installed dissipater. c) Side view of the pile cap seated on the ground beams.

2.1 Specimen design and modelling

The specimen seismic design parameters, dimensions, and design displacement were derived based on seismic design of a prototype structure. The prototype was assumed to be located in Christchurch and represented a typical New Zealand highway 20m span, single column bent, simply supported I-beam deck bridge. The piers of the prototype were assumed to resist seismic loads in the transverse direction only. The seismic design of the prototype was undertaken using Direct Displacement Based Design (DDBD) [20] assuming the structure to be importance level 2, have a hazard factor of 0.3, constructed on site class C soil; and not be subject to near fault effects. NZS1170.5:2004 [21] was used to obtain the design spectra. The design drift (ULS/DCLS) of the prototype was assumed to be 2%. After the dimensions and seismic design parameters of the prototype were determined the specimen properties were obtained by applying similitude relationships assuming a geometric

scale factor of 2/3. Table 1 summarizes the key specimen design parameters determined from the aforementioned process.

Detailed design of the specimen was conducted after the target specimen seismic design parameters were determined. Initially the specimen was analysed as a DCR only column to determine the post-tensioning properties, dissipater properties, and nominal CALS/MCE displacement demand. The analysis undertaken to obtain these properties was a sectional push over analysis using post-tensioned only MBA (ptMBA) [22] which is applicable to DCR connections with external dissipaters. Once these values were known, the pile cap dimensions were determined such that decompression of one end of the pile cap (zero stress over one ground beam) would occur after the design displacement was reached. In the modelling undertaken, P-Δ effects were ignored to match the conditions of the experiment.

Table 1 – Target specimen seismic design parameters obtained from displacement based design.

Limit state	Specimen design parameters	Units	Value
Damage Control (ULS)	Design gravity load, W_{scaled}	kN	1000
Damage Control	Design lateral load, V_{scaled}	kN	317
Damage Control	Design base moment, M_{scaled}	kNm	1268
Damage Control	Design displacement, Δ_{DCLS}	mm	68
Collapse Avoidance (MCE)	Displacement, Δ_{CALS}	mm	140
-	Pier diameter, D_{scaled}	mm	1000
-	Effective height of equivalent SDOF, $H_{e,\ scaled}$	mm	4000

2.2 Test setup and loading regime

The specimen was loaded by three 1MN capacity hydraulic rams (Fig. 5b and 7). Two of these rams made up the gravity loading system which applied a constant vertical compressive load to the specimen. The gravity loading rams were bolted to the strong floor and connected to the loading beam by high strength steel rods (Fig. 7). The pin connection between each of the rams and the strong floor was oriented so that the rams could pivot about these as the specimen was displaced laterally. Because the gravity loading system essentially stayed parallel to the axis of the column during lateral displacement, P-Δ effects could not be replicated.

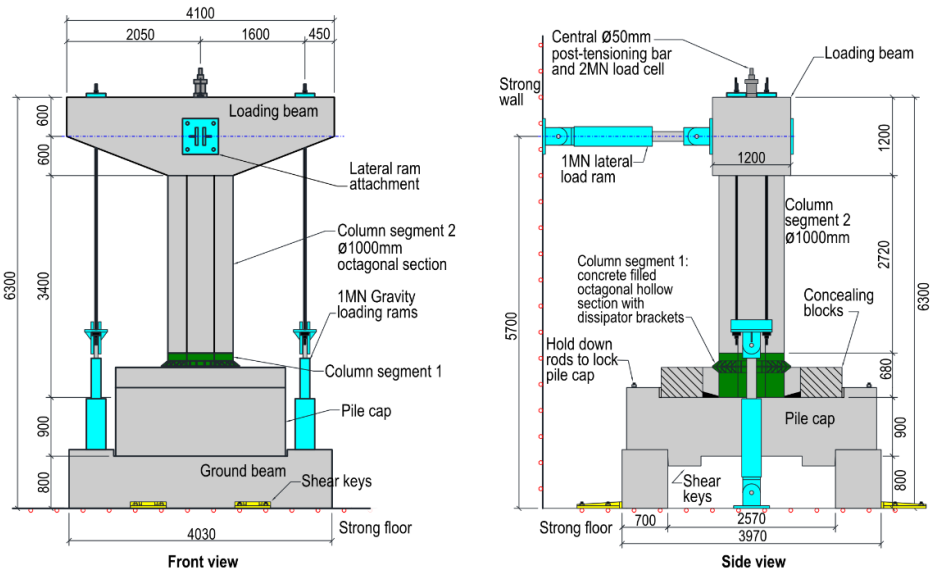

Fig. 7 - Schematic of specimen showing dimensions and test set up.

A single 1MN capacity hydraulic ram connected to the strong wall (Fig 5b) was used to apply quasi-static, unidirectional, cyclic lateral loading to simulate seismic loads. The loading regime was based on ACI T1.1-01 [23] and had 13 different drift levels (Fig. 8). Each drift level had three cycles of constant amplitude loading. The drift levels applied ranged from 0.1% (4mm displacement) up to 4.375% drift (175mm displacement) (Fig. 8). The largest drift level applied was limited by stroke capacity of the ram.

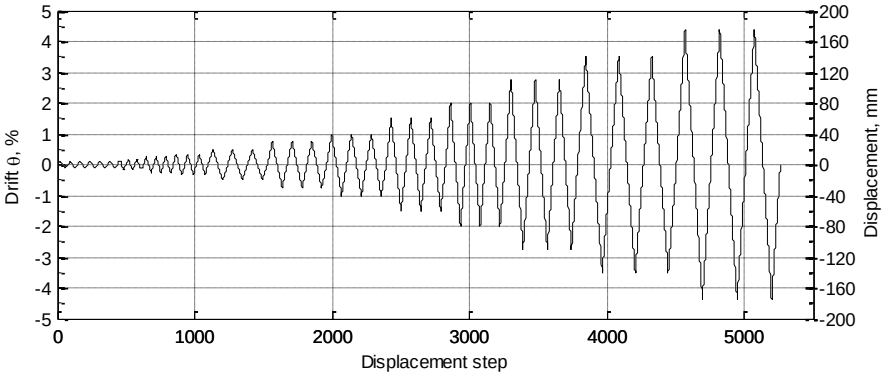

Fig. 8 - Plot of the loading protocol used.

2.3 Testing schedule

Four tests were conducted on the specimen in the combined DCR-pile cap rocking configuration (Table 2). Firstly, the specimen was subject to the loading protocol in test T4-PCDCR. Then tests T4a-PCDCR to T4c-PCDCR were conducted where the gravity load was reduced and only one cycle of loading was applied per level of gravity loading. T4a-T4c were conducted to obtain the response of the specimen under different levels of applied gravity load so that the effect of different amounts of pile cap uplift could be observed. In tests T4a to T4c-PCDCR, the column base only had 6 dissipaters as two ruptured due to low cycle fatigue in T4-PCDCR.

Table 2 – Test Schedule

Test number and configuration description	Pier post-tensioning (kN)	Pier base dissipators (no. of)	Gravity load (kN)
(T4-PCDCR): Pile cap rocking + DCR	643	8	1000
(T4a-PCDCR): Pile cap rocking + DCR	636	6	800
(T4b-PCDCR): Pile cap rocking + DCR	636	6	600
(T4c-PCDCR): Pile cap rocking + DCR	636	6	400

3. Experimental Results and Analysis

In the first test undertaken (T4-PCDCR, Fig.'s 9 and 10), the pile cap was predicted to uplift in the final drift level (4.38%) of the loading protocol (Fig. 10b). However, the extreme tension fiber dissipaters ruptured due to low cycle fatigue prior to any significant uplift of the pile cap occurring (Fig. 9a and 10b). At this drift level the peak displacement was limited to 166mm to prevent the post-tensioning from yielding due to the increase in column base gap opening caused by loss of two dissipaters (Fig. 9b).

In tests T4a to T4c-PCDCR the gravity load was reduced (Table 2 and Fig. 11). The result of this was a reduction in overall lateral capacity and earlier onset of pile cap uplift (Fig. 11). Of note with the force-displacement response is that as the pile cap was able to uplift more under reducing gravity load (Fig. 11b), the hysteresis during a portion of the unloading phase became pinched (Fig. 11a). This observation is attributed

to the column base gap opening remaining constant (Fig. 13a), while, the pile cap uplifts from the ground beam (Fig. 13b) preventing the column base dissipaters from contributing energy dissipation to the system. Upon the pile cap returning back to being supported on both ground beams, the hysteresis (Fig. 12a) then follows the same unloading path for the column base DCR connection.

It is clear from Fig's 9a and 12a that the backbone of the observed force-displacement response has a stepped shape unlike the predicted response. This discrepancy is attributed to the column base of the specimen having non-uniform contact with the top of the pile cap due to levelling of the surfaces during casting. It is believed that the bottom surface of the column is such that initial contact is over an area of smaller diameter than the full column diameter and only when the column has rocked a certain amount does the rest of the column section make contact with the pile cap increasing the moment capacity of the section to that which the full section should provide. Despite this difference in initial response, the model was able to predict well the large displacement response of the DCR column.

Fig.'s 12 and 13 present a comparison of the model against the observed response when the specimen had the lowest level of gravity load applied to it (test T4c-PCDCR). The model was reasonably able to capture the displacement at which pile cap rocking occurs (Fig. 13b) and the rate of rotation as a function of lateral displacement. Once pile cap rocking occured it clear from Fig. 12b that the post-tensioning force begins to plateau meaning that the elongation which the post-tensioning experiences becomes limited and hence the combination of DCR and foundation rocking can be used to avoid reaching the yield elongation of the post-tensioning.

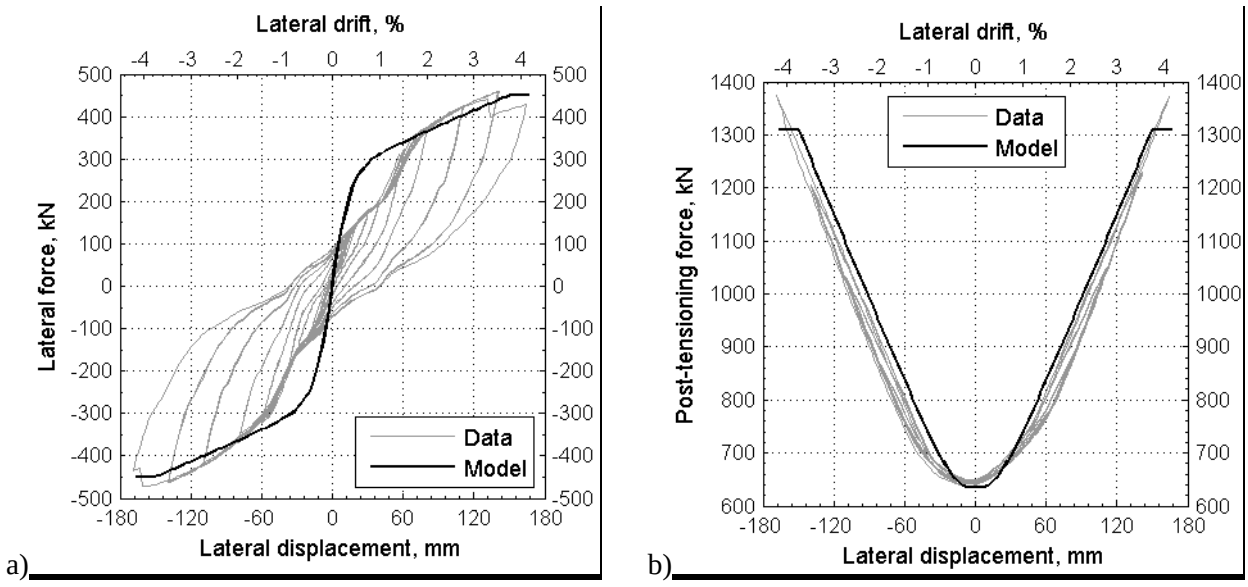

Fig. 9 - Measured lateral force and post-tensioning response of the specimen in test T4-PCDCR compared with the predicted response.

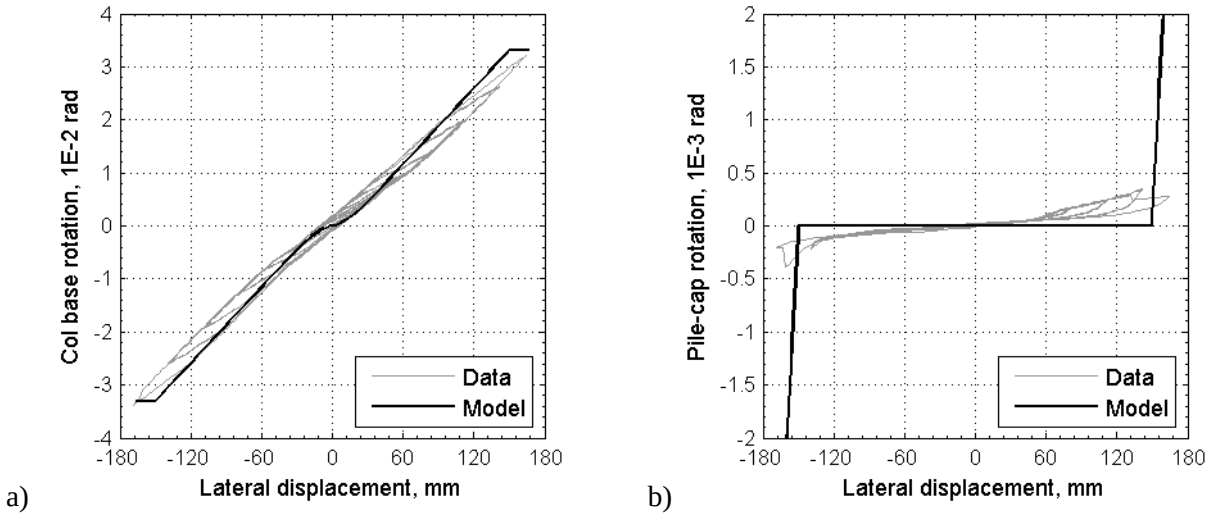

Fig. 10 - Column base joint rotation and pile cap rotation response measured in test T4-PCDCR and compared with the predicted response.

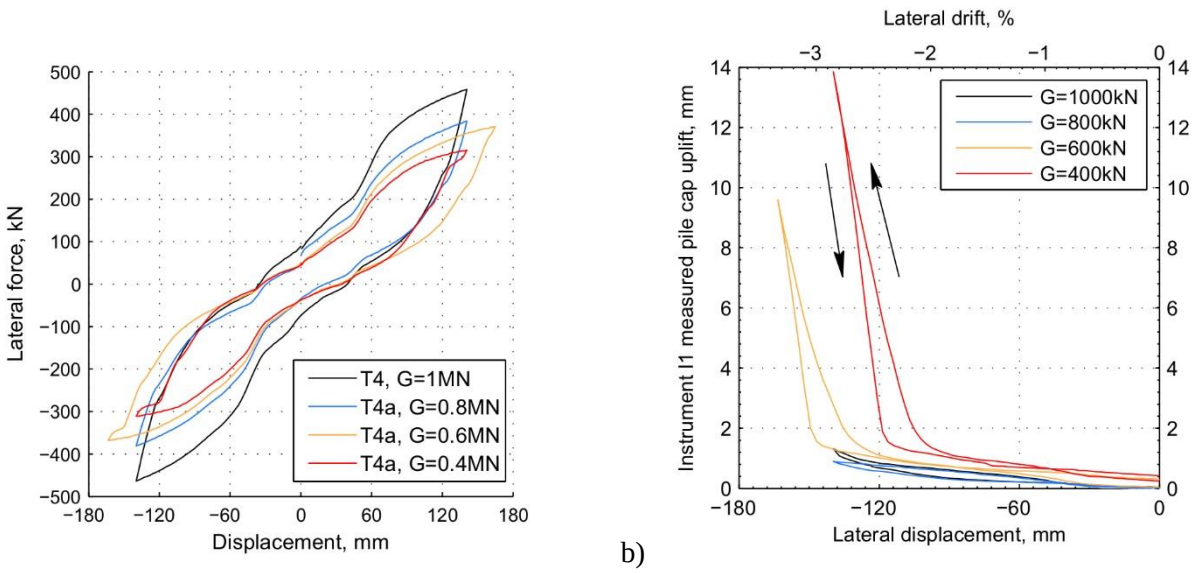

Fig. 11 - a) Single load-cycle force-displacement loops for T4-PCDCR and T4a to T4c-PCDCR comparing effect of gravity load. b) Pile cap uplift measured at one corner of the pile cap as a function of gravity load.

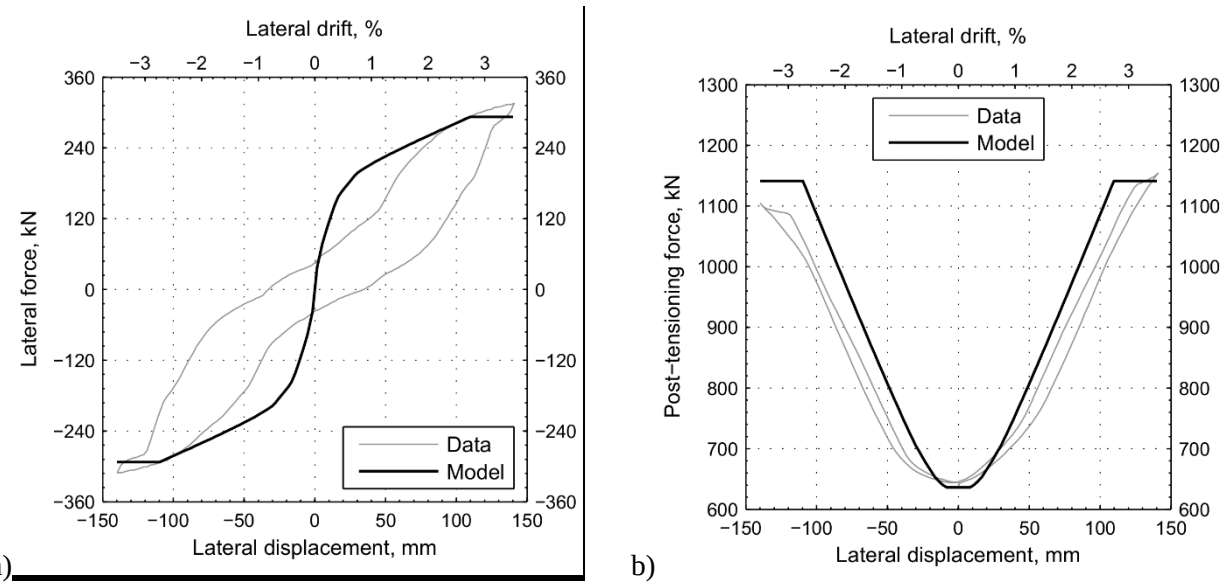

a) b)

Fig. 12 - Comparison of model against data for test T4c-PCDCR, with applied gravity load of 400kN.

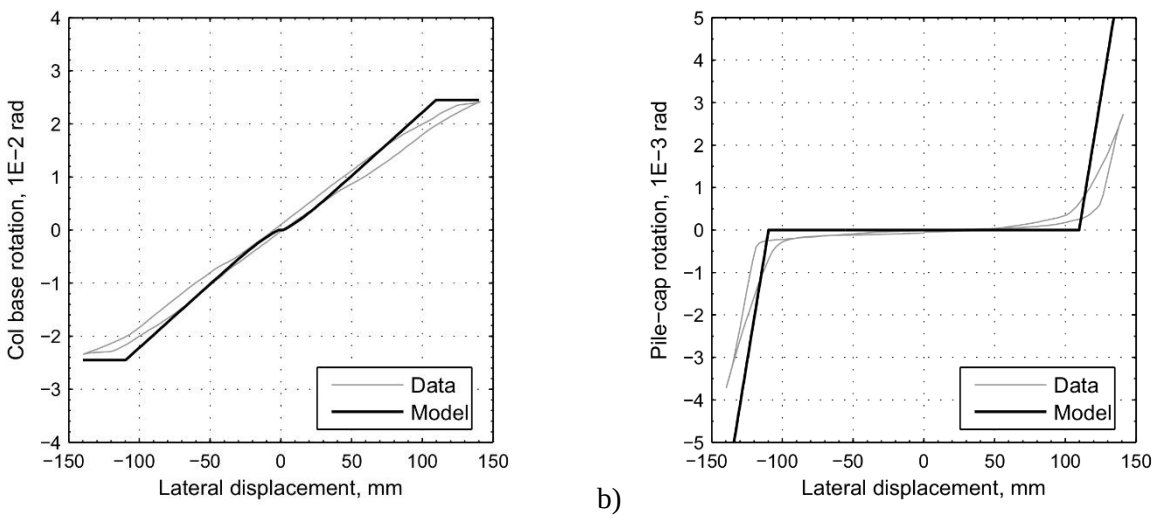

a) b)

Fig. 13 - Comparison of the predicted column base joint rotation and pile cap uplift as a function of lateral displacement against test data for test T4c-PCDCR.

4. Conclusions

In conclusion, this paper presented a possible solution for ensuring that structural systems claiming to be low damage are not simply low damage by virtue of the seismic load being less than or equal to that defined for ULS. The solution presented consisted of the application of both the concepts of multi-performance design and hierarchical activation. Examples of low damage structural systems arising from these concepts were presented. In particular, focus was given to the combination of dissipative controlled rocking and pile cap rocking. Experimental work conducted on a 2/3 scale bridge pier using this combined system was presented. The design of the combined dissipative controlled rocking column and pile cap rocking foundation (PCDCR) was described in addition to the predictive modelling undertaken, and presentation of results. It was shown

that the model could reasonably predict the specimens' performance and that a benefit of the PCDCR system was protection of the post-tensioning from overstraining at CALS.

5. Acknowledgements

The authors thank the UC Quake Centre (Robert Finch) and the Natural Hazards Research Platform for providing funding; Bradford Precast Ltd for their sponsorship and specimen manufacture; and the UC technical staff Gavin Keats, Mosese Fifita and Peter Coursey for their contribution to the experimental work.

6. References

[1] New Zealand Transport Agency, *Bridge manual 3rd Edition*, 3rd ed. 2013.

[2] G. Antonellis and M. Panagiotou, "Seismic Response of Bridges with Rocking Foundations Compared to Fixed-Base Bridges at a Near-Fault Site," *J. Bridg. Eng.*, vol. 19, no. 5, 2014.

[3] I. Anastasopoulos, M. Loli, T. Georgarakos, and V. Drosos, "Shaking Table Testing of Rocking-Isolated Bridge Pier on Sand," *J. Earthq. Eng.*, vol. 17, no. 1, pp. 1–32, 2013.

[4] L. Deng, B. L. Kutter, and S. K. Kunnath, "Centrifuge Modeling of Bridge Systems Designed for Rocking Foundations," *J. Geotech. Geoenvironmental Eng.*, vol. 138, no. 3, pp. 335–344, 2012.

[5] A. O. Espinoza and S. A. Mahin, "Seismic Performance of Reinforced Concrete Bridges Allowed to Uplift during Multi-Directional Excitation," Berkley, California, 2012/02, 2012.

[6] P. E. Mergos and K. Kawashima, "Rocking isolation of a typical bridge pier on spread foundation," *J. Earthq. Eng.*, vol. 9, no. SPEC. ISS. 2, pp. 395–411, 2005.

[7] S. Gajan and B. L. Kutter, "Capacity , Settlement , and Energy Dissipation of Shallow Footings Subjected to Rocking," *J. Geotech. Geoenvironmental Eng.*, vol. 134, no. 8, pp. 1129–1141, 2008.

[8] G. Antonellis *et al.*, "Shake Table Test of Large-Scale Bridge Columns Supported on Rocking Shallow Foundations," *J. Geotech. Geoenvironmental Eng.*, vol. 141, no. 1, pp. 821–830, 2015.

[9] Z. Guan, X. Chen, and J. Li, "Experimental investigation of the seismic performance of bridge models with conventional and rocking pile group foundations," *Eng. Struct.*, vol. 168, no. September 2017, pp. 889–902, 2018.

[10] M. J. N. Priestley, "The PRESSS Program Current Status and Proposed Plans for Phase III," *PCI J.*, vol. 41, no. 2, pp. 22–40, 1996.

[11] W. C. Stone, G. S. Cheok, and J. F. Stanton, "Performance of Hybrid Moment-Resisting Precast Beam Column Concrete Connections Subjected to Cyclic Loading," *ACI Struct. J.*, vol. 92, no. 2, pp. 229–249, 1995.

[12] C. Christopoulos, A. Filiatrault, C. M. Uang, and B. Folz, "Posttensioned Energy Dissipating Connections for Moment-Resisting Steel Frames," *J. Struct. Eng.*, vol. 128, no. 9, pp. 1111–1120, 2002.

[13] D. Marriott, S. Pampanin, and A. Palermo, "Quasi-static and pseudo-dynamic testing of unbonded post-tensioned rocking bridge piers with external replaceable dissipaters," *Earthq. Eng. Struct. Dyn.*, vol. 38, no. 3, pp. 331–354, 2008.

[14] F. Sarti, A. Palermo, and S. Pampanin, "Fuse-Type External Replaceable Dissipaters: Experimental Program and Numerical Modeling," *J. Struct. Eng.*, vol. 142, no. 12, 2016.

[15] S. White, "Controlled damage rocking systems for accelerated bridge construction," University of Canterbury, 2014.

[16] R. Liu and A. Palermo, "Pier to deck interaction and robustness of PRESSS hybrid rocking : issues affecting hammerhead pier bridges," in *2016 NZSEE Conference*, 2016, pp. 1–9.

[17] R. Liu and A. Palermo, "Quasi-static testing of a 1/3 scale precast concrete bridge utilising a post-tensioned dissipative controlled rocking pier," in *16th World Conference on Earthquake Engineering*, 2017, pp. 1–12.

[18] M. Ghosn, F. Moses, and D. M. Frangopol, "Redundancy and robustness of highway bridge superstructures and substructures," *Struct. Infrastruct. Eng.*, vol. 6, no. 1–2, pp. 257–278, 2010.

[19] W. D. Liu, A. Neuenhoffer, M. Ghosn, and F. Moses, "NCHRP report 458: Redundancy in highway bridge substructures," Washington D.C., 2001.

[20] M. J. N. Priestley, G. M. Calvi, and M. J. Kowalsky, *Displacement Based Seismic Design of Structures*. Pavia, Itlay: IUSS Press, 2007.

[21] Standards New Zealand, "NZS1170 Structural design actions, Part 5: Earthquake actions - New Zealand," 2004.

[22] D. Marriott, "The Development of High-Performance Post-Tensioned Rocking Systems for the Seismic Design of Structures," University of Canterbury, 2009.

[23] ACI Innovation Task Group 1, *Acceptance criteria for moment frames based on structural testing*. Farmington Hills, Michigan, USA: American Concrete Institute, 2001.